Fig.No. ZT-303D Three Piece Swing-out In-line Maintenance

1500PSI STAINLESS STEEL BALL VALVES-STANDARD PORT

FEATURE & SPECIFICATIONS

* Direct-mounting of actuators to valves
* Blow-out proof stem
* Anti-Static design is standard
* Working Pressure: 1500 WOG
* Temperature range: -20 to 450°F
* End Type: Threaded Socket & Butt weld

UNIT: mm

SIZE	øD	øD1	øD2	øD3	øD4	F	L	H	A	S	P	øK1	øK2	R1	R2
2-1/2"	50	50	65	78	77	18.5	137	75	14	14	70	50	70	3.5	4.5
3"	65	65	80	90	89.9	20	171	119	19	17	102	70	102	4.5	5.5
4"	80	80	100	114	115	25	214	138	19	17	102	70	102	4.5	5.5

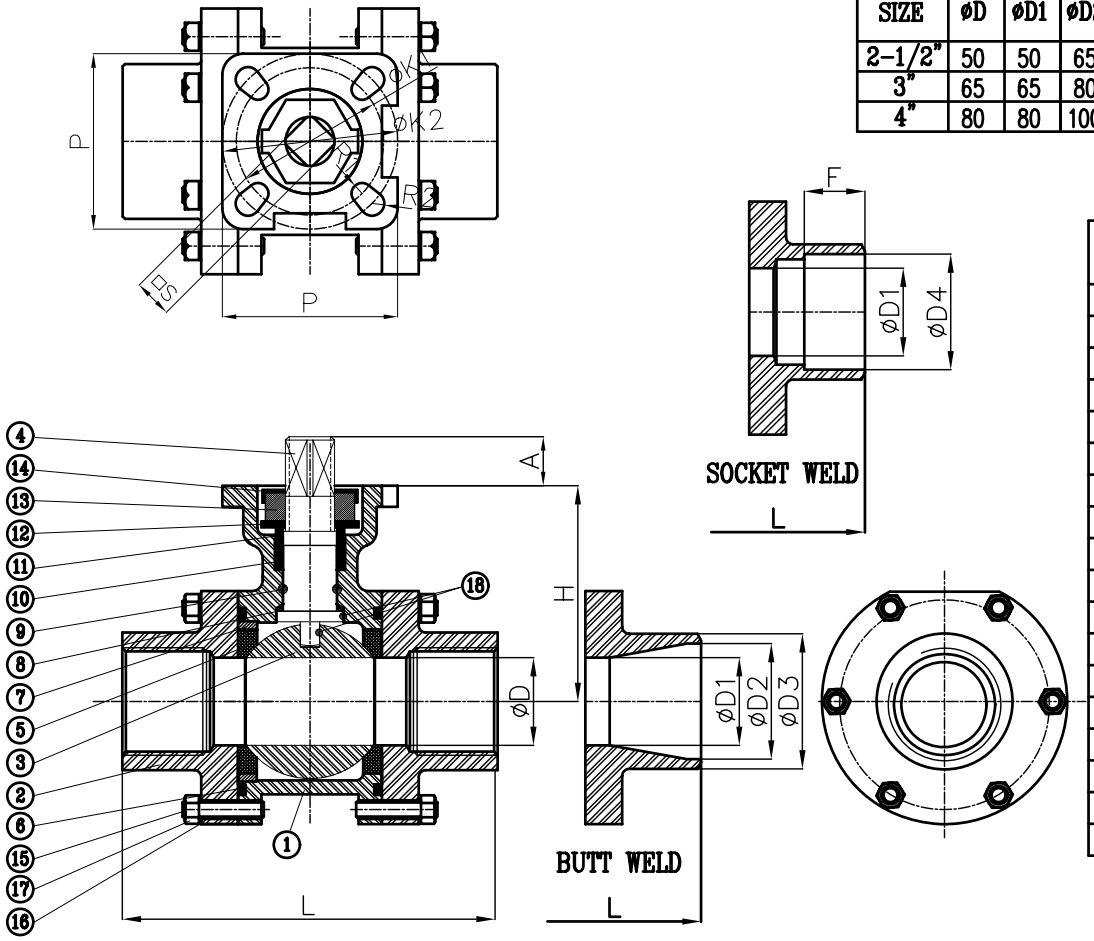

NO.	PART NAME	Q'ty	MATERIAL
1	BODY	1	ASTM A351 GR.CF8M
2	CAP	2	ASTM A351 GR.CF8M
3	BALL	1	ASTM A351 GR.CF8M
4	STEM	1	SS316
5	SEAT	2	PTFE
6	GASKET	2	PTFE
7	GASKET RING	1	SS316
8	THRUST WASHER	1	MG1241
9	O-RING	1	VITON
10	STEM PACKING	1	RPTFE
11	GLAND	1	SS304
12	BEVEL WASHER	2	SS301
13	STEM NUT	1	SS304
14	LOCK CAP	1	SS304
15	BOLTS	2"~2-1/2"=12 3"~4"=16	SS304
16	BOLT WASHERS		SS304
17	BOLT NUTS		SS304
18	STATIC DEVICE	2	SPRING

ZHE THAI MACHINERY CO., LTD.